G 1549 (Pages : 3) Reg. No.....

Name.....

SAINTGITS COLLEGE OF ENGINEERING LIBRARY KOTTAYAM

B.TECH. DEGREE EXAMINATION, MAY 2015

Fourth Semester

Branch : Automobile/Chemical/Mechanical/Production/Naval Architecture and ship Building Engineering

AU 010 405/ME 010 405/PE 010 405/ST 010 405/CH 010 405—MACHINE DRAWING (AU, CH, ME PE, ST)

(New Scheme—2010 Admissions onwards)

[Regular/Improvement/Supplementary]

Time : Three Hours Maximum : 100 Marks

Answer **all** *questions.*
Missing dimensions, if any, may be assumed.
Drawing sheets will be supplied.

1. Answer any *two* of the following :—

   (a) Define and sketch three types of fits.

   (b) Draw the three views of a hexagonal nut suitable for M-30 bolt.

   (c) Draw to views of double riveted (chain type) butt joint with two cover straps. Take thickness of the plates as 10 mm. Show at least two pitch length.

   (2 × 7½ = 15 marks)

2. Answer (a) *or* (b) :

   (a) Fig. 1 shows (on page 2) the details of a Flexible Coupling. Draw the following views :

   (i) Elevation top half in section. (13 marks)

   (ii) View from left. (12 marks)

   (b) Fig. 2 shows (on page 2) the details of a connecting Rod. Draw the following views :

   (i) Elevation top half in section. (13 marks)

   (ii) Plan bottom half in section. (12 marks)

3. Fig. 3 shows (on page 3) the details of a Lathe Tool Post. Assemble the component and draw the following views :

   (a) Full sectional front view. (40 marks)

   (b) Top view. (20 marks)

Turn over

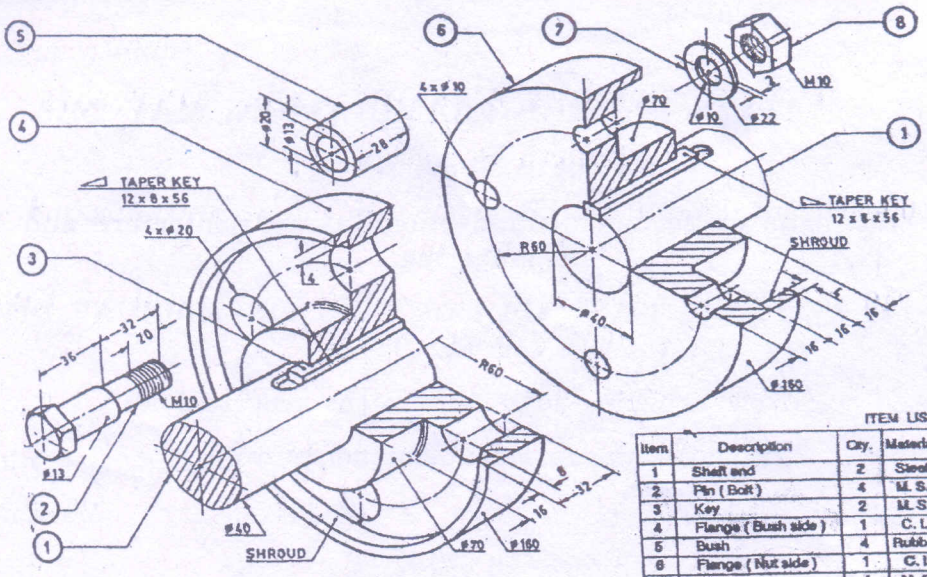

ITEM LIST

Item	Description	Qty.	Material
1	Shaft end	2	Steel
2	Pin (Bolt)	4	M. S.
3	Key	2	M. S.
4	Flange (Bush side)	1	C. I.
5	Bush	4	Rubber
6	Flange (Nut side)	1	C. I.
7	Washer	4	M. S.
8	Nut	4	M. S.

Fig. 1 Flexible Coupling.

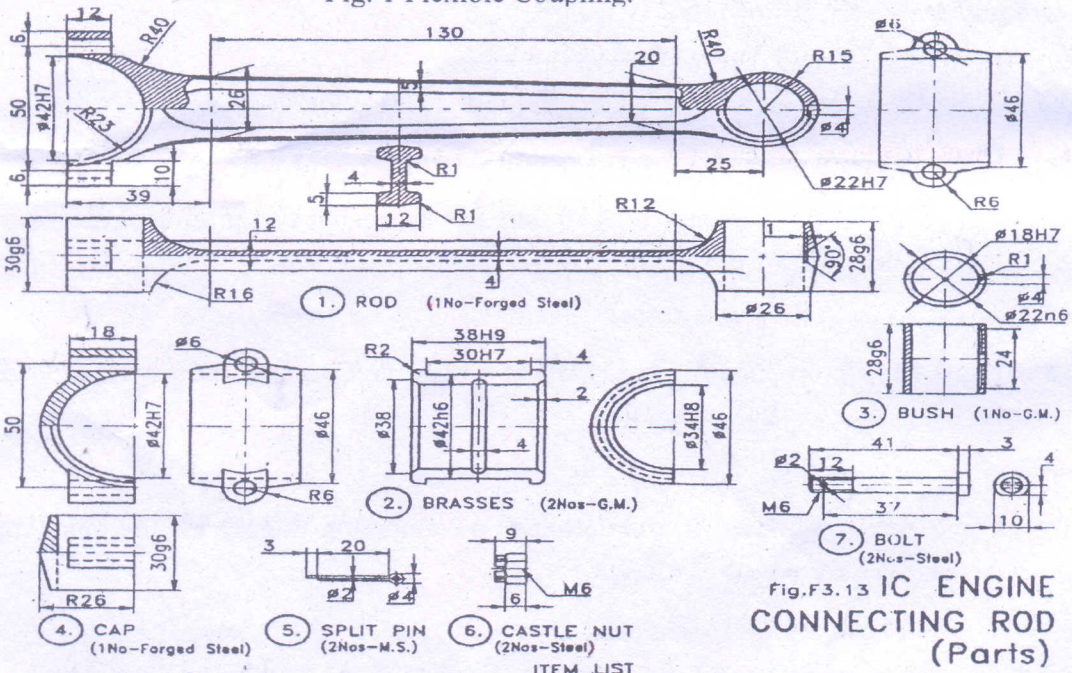

Fig.F3.13 IC ENGINE CONNECTING ROD (Parts)

ITEM LIST

Item	Description	Qty.	Material
1	Rod	1	F. Steel
2	Brasses	2	G.M.
3	Bush	1	G.M.
4	Cap	1	F. Steel
5	Split pin	2	M. S.
6	Castle nut	2	Steel
7	Bolt	2	Steel

SAINTGITS COLLEGE OF ENGINEERING LIBRARY KOTTAYAM

Fig. 2 Connecting Rod

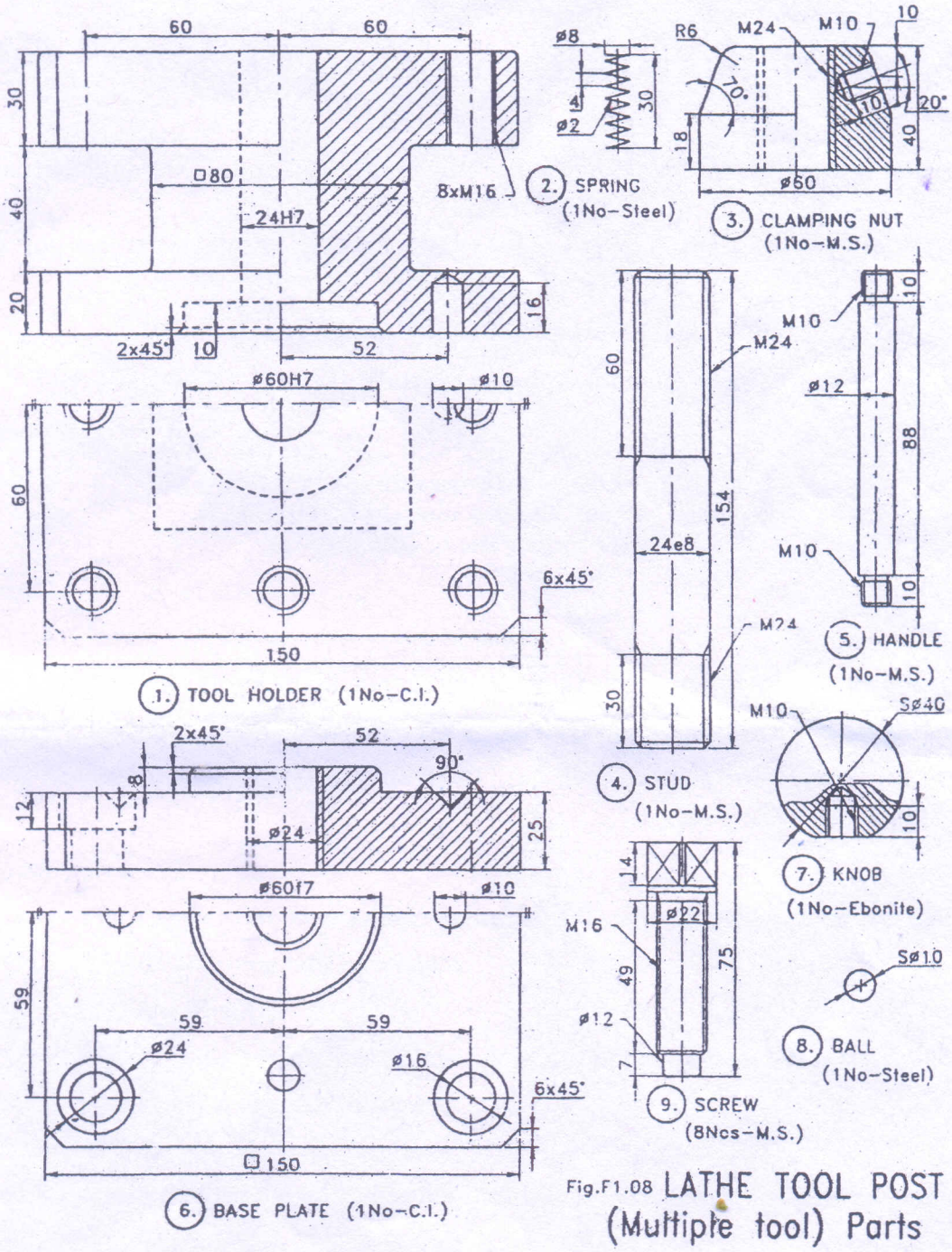

SAINTGITS COLLEGE OF ENGINEERING LIBRARY KOTTAYAM

Fig. 3 Lathe Tool Post